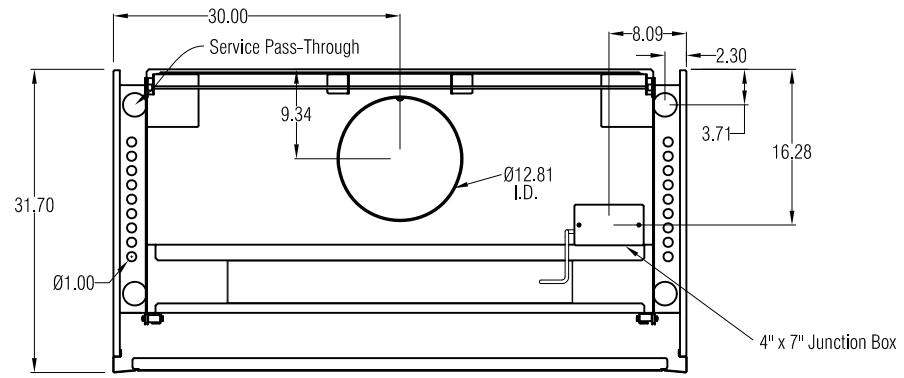

TOP VIEW

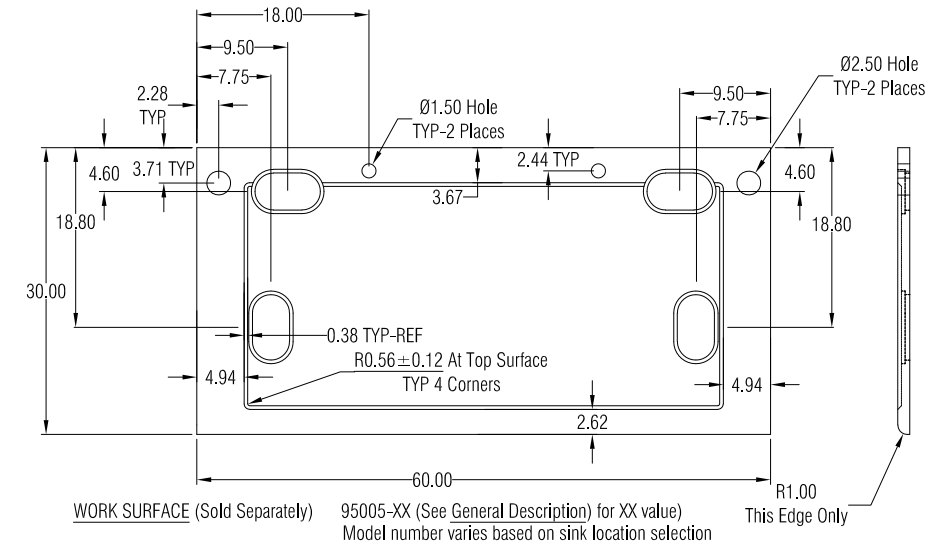

WORK SURFACE (Sold Separately)

95005-XX (See General Description) for XX value)
Model number varies based on sink location selection

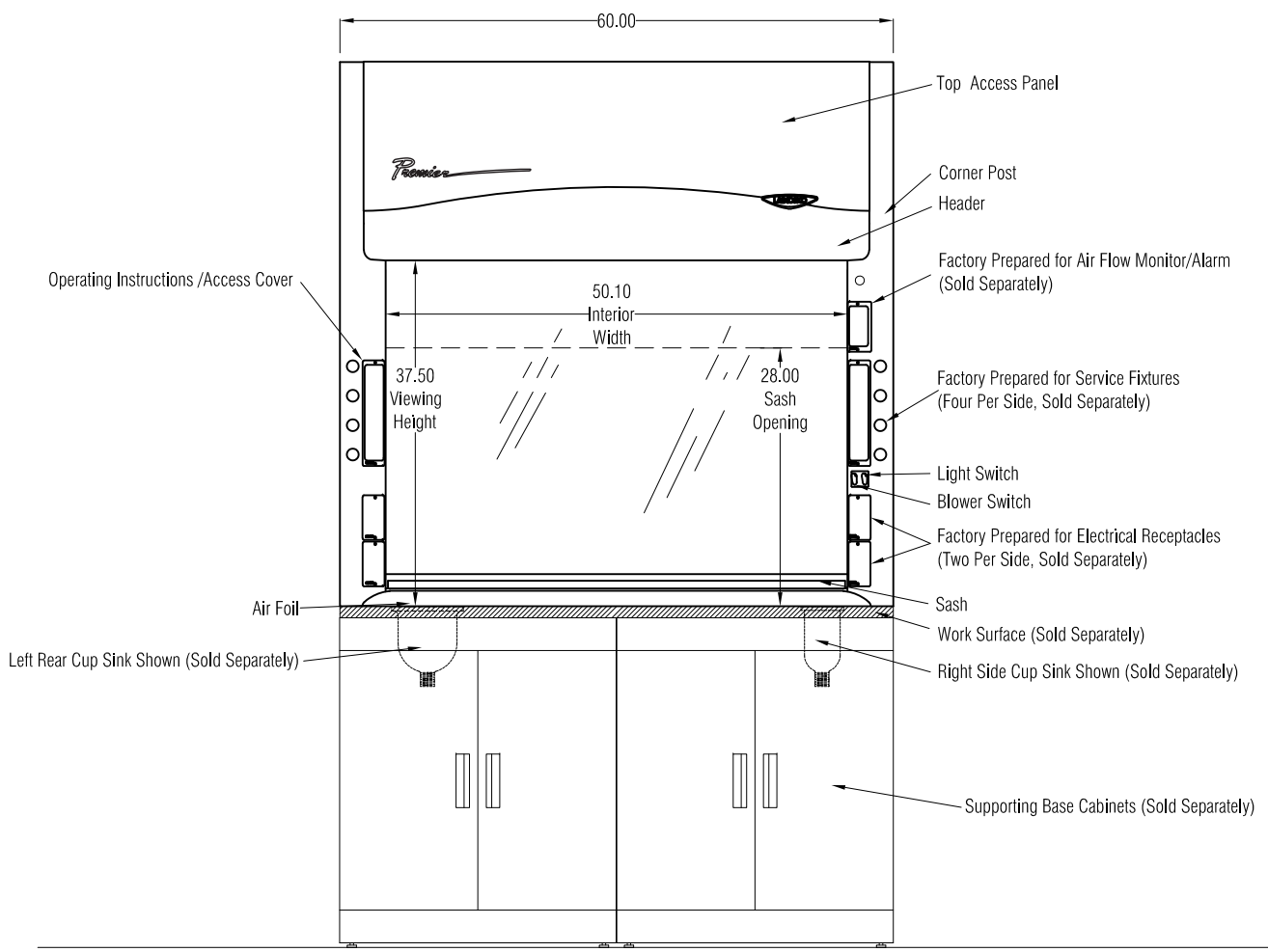

FRONT VIEW

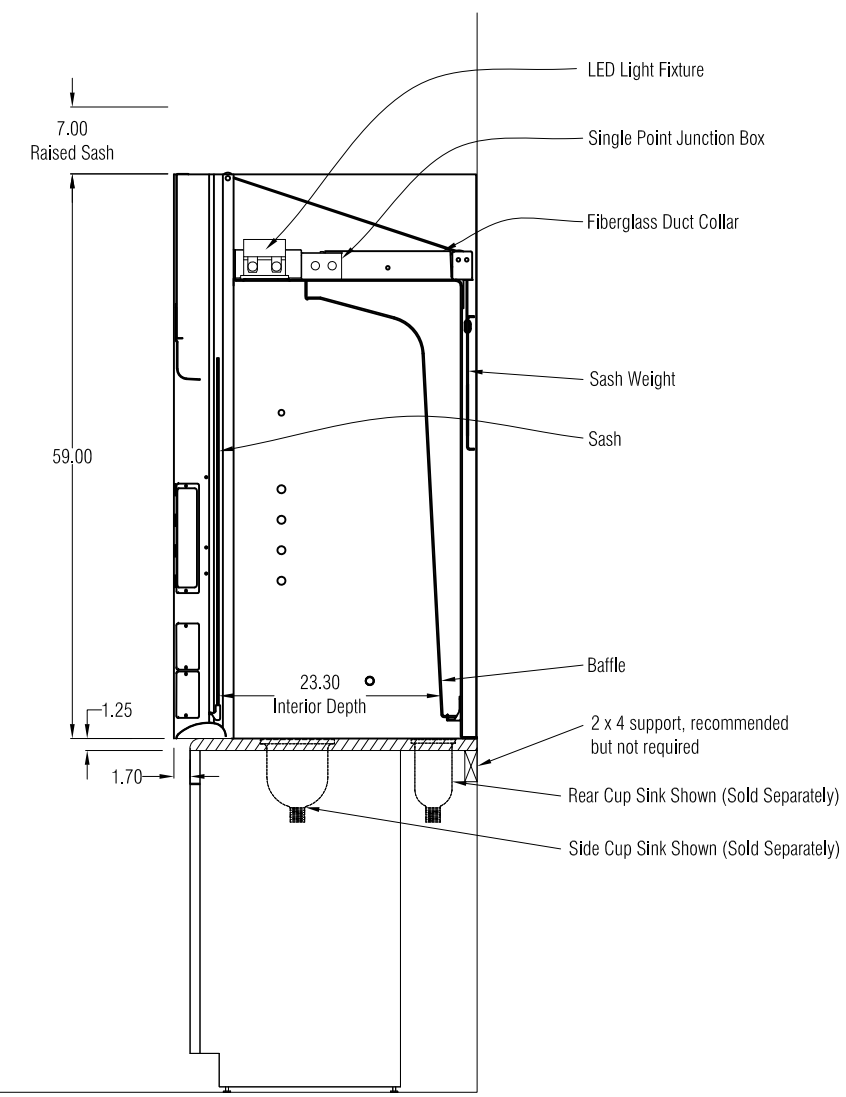

SIDE VIEW

GENERAL DESCRIPTION

5' Protector Premier Laboratory Hood
Model: 100500020

Exterior Superstructure
* Double Wall Construction * Cold Rolled Steel

Interior Superstructure
* Galvanized Steel (standard)

Left / Right Facia:
* Powder Coated Steel * Color: Glacier White

Liner Material
* Molded Fiberglass Reinforced Polyester Resin

Side Panels
* Both Sides * Removable * Color: Glacier White

Baffles
* Molded Fiberglass Reinforced Polyester Resin

Interior Access Panels
* None

Corner Post with Access Covers
* Right and Left Sides
* Cold Rolled Steel

Air Foil
* Cold Rolled Steel * Powder Coat Finish

Sash
* Vertical Travel
* Tempered Safety Glass
* Counter Weighted and Balanced
* Pulley System

Electrical Fixtures
* LED Light and Tubes w/ Switch

Alarm / Monitor (Sold Separately)
* Factory Prepared for Air Flow Monitor/Alarm

Wiring
* Fume Hood Wired at Factory
* Electrical Connection made inside 4x7 Junction Box
* 208–230, 50/60 Hz

Service Fixtures (Sold Separately)
* Factory Prepared for Service Fixtures, Four Per Side

Work Surface (Sold Separately)
* Black Epoxy Work Surface, Model 95005–XX (See below for XX)
  * # 00 – No cup sink cutouts
  * # 01 – Cup sink cutout right rear location
  * # 02 – Cup sink cutout right side location
  * # 10 – Cup sink cutout left rear location
  * # 20 – Cup sink cutout left side location
  * # 11 – Cup sink cutouts left and right rear locations
  * # 22 – Cup sink cutouts left and right side locations

Cup Sink (Sold Separately)
* Black Oval Polypropylene Cupsink, 3" x 6", # 4005200

Required Accessories (Sold Separately)
* Remote Blower
* Supporting Base

	Airflow Volumetric Rate (CFM) @ Static Pressure (inches of water)	
Face Velocity (fpm)	100% open (28")	62.5% open (18")
100	955 @ 0.31"	595 @ 0.12"
80	765 @ 0.20"	480 @ 0.08"
60	575 @ 0.11"	360 @ 0.04"

Assembly and Crating
* Pre–Assembled
* Palletized

SCALE: Scaled to fit

FUME HOODS for:

LABCONCO CORPORATION • KANSAS CITY MO USA 64132
800-821-5525 / 816-333-8811 • labconco.com

Rev	Date

Date: June 2023

Drawing # 100500020

Drawn By: C. Alumbaugh

Checked By:

Approved By:

Sheet No.